AIR COMPRESSOR
AC15D

Duratech
Professional Maintenance Free Technology

V3PRO Pump

15A Plug 230V

2 YEAR WARRANTY

Air Command 3.5HP Belt Driven 100LT Duratech Silent Series 15amp

Step up to the AC15D when your workshop can't afford downtime. The Duratech Professional Maintenance Free technology sits behind the V3PRO pump, giving you stronger air delivery with a fraction of the noise of a standard compressor. That means less strain on your ears and faster turnaround on every job. Medical grade air output keeps your tools running cleaner for longer and sharpens precision work where it counts. With no oil to change and nothing to contaminate your air line, upkeep stays out of your way. The 100 litre tank holds enough reserve to run multiple tools back to back, backed by reliable 230V 50Hz single phase power.

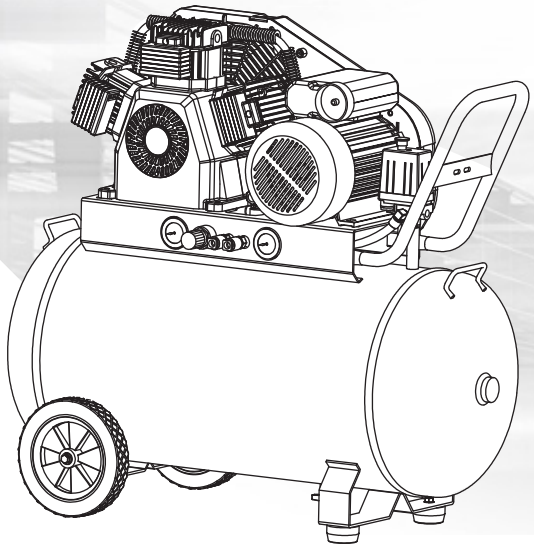

- **Duratech Professional Maintenance Free compressor technology**
  Keep working with no scheduled maintenance downtime
- **V3PRO precision engineered pump**
  Quieter, faster air delivery so you get the job done sooner
- **Medical grade air output**
  Protects your air tools and improves precision performance
- **Oil free operation**
  No oil changes, no oil contamination in your air line
  100 litre tank capacity
- **Dual Outlets + Strong 100L Air Reserve**
  Consistent air supply for continuous tool use on site

Technical Specifications

Power Supply	230V-50Hz 15A
Motor Size	3.5HP
Tank Volume	100L
Max. Pressure	120PSI
Pump Speed	1050 rpm
Motor Speed	2850 rpm
Pump Displacement	428L/min 15CFM
FAD Free Air Delivery	280L/min 10CFM
Weight	76kg
Dimensions	1100 x 430 x 840mm

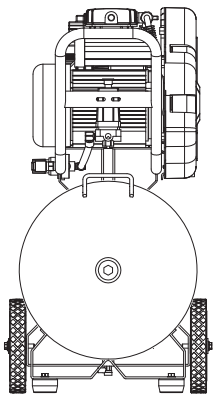

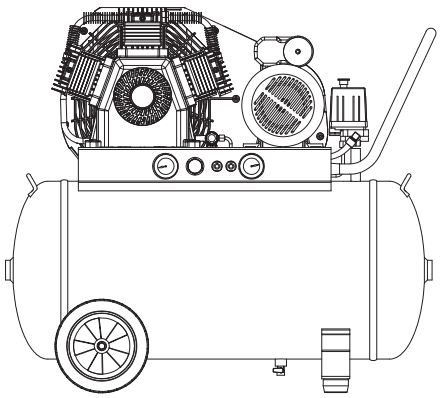

Key Optional Accessories

1


2


1. AC10HS - SuperFlex Air Hose 3/8" x 10m
2. AC3820HR - Dual Arm Steel Retractable Air Hose Reel 20m

For more information, visit the website.

AC15D
User guide, specs, videos
LEARN MORE